D815 Tessmann Worlds Edition

Driver Reno Savoya **Date** 29-30/08/2015 **Track** La Nucia, Spain **Event** Italian Job Race

Track Condition Dry blue groove, high speed, high grip, some bumps

Front

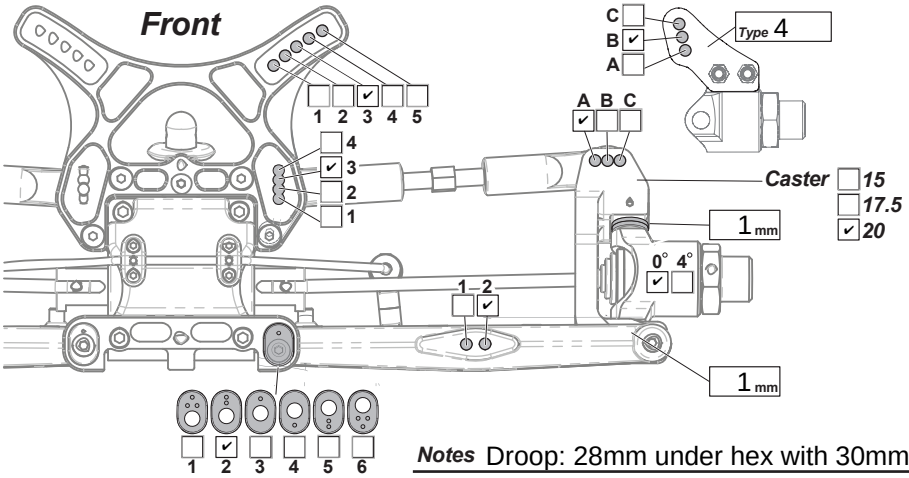

Ride Height	25 mm
Camber Angle	-3 °
Toe Angle	2 out °
Sway Bar	2,4 mm
Shock Length	105,5 mm

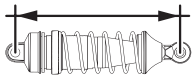

Front Shocks

Oil weight	45 wt
Piston	8x,2 mm
Bladder	stock
Spring	gold

Notes Droop: 28mm under hex with 30mm block under chassis

Rear

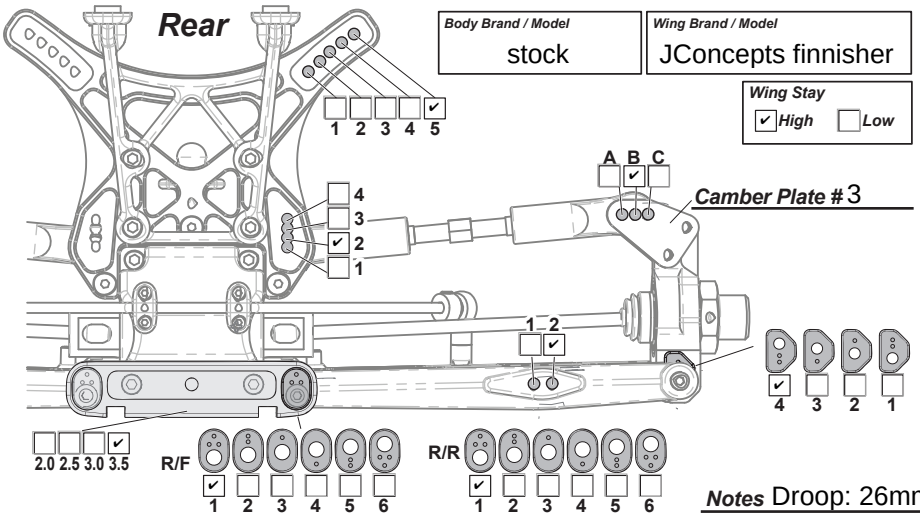

Body Brand / Model	stock
Wing Brand / Model	JConcepts finnisher
Wing Stay	✔ High ☐ Low

Ride Height	27 mm
Camber Angle	-4 °
Sway Bar	2,6 mm
Shock Length	122 mm

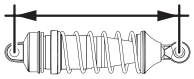

Rear Shocks

Oil weight	37,5 wt
Piston	8x1,2 mm
Bladder	stock
Spring	yellow

Notes Droop: 26mm under hex with 30mm block under chassis

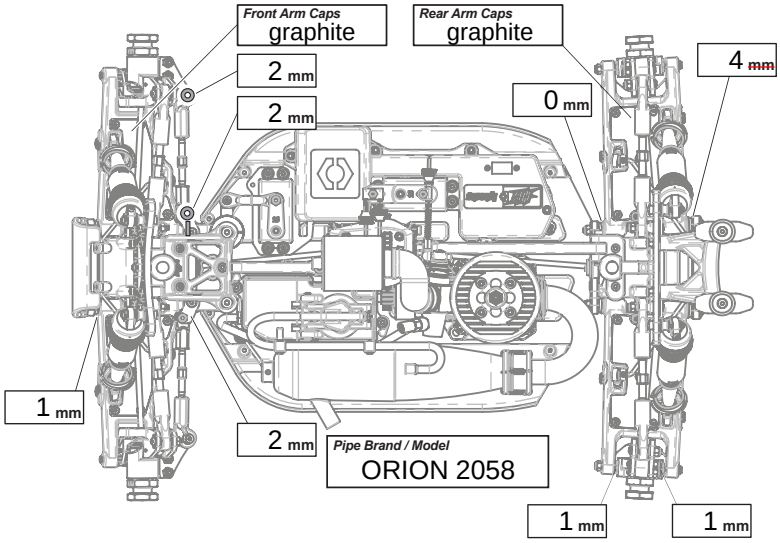

Engine

Brand	Team Orion RS
Spur gear	48
Clutch Bell	13
Clutch Shoes	stock
Clutch Springs	2x1mm, 1x1.1mm
Glow Plug	4
Glow Fuel	Runnertime 25%

Tires

	Front	Rear
Brand	JConcepts	Remix
Compound	yellow	yellow
Insert	dirt tech	dirt tech
Wheel	Bullet	Bullet
Notes		

Diff Oils

	Front	Center	Rear
Brand	RSRC	RSRC	RSRC
Oil Weight / Grade	10k	7k	5k

Notes +4mm chassis, stock car

D812 rear hubs, upper row outside hole